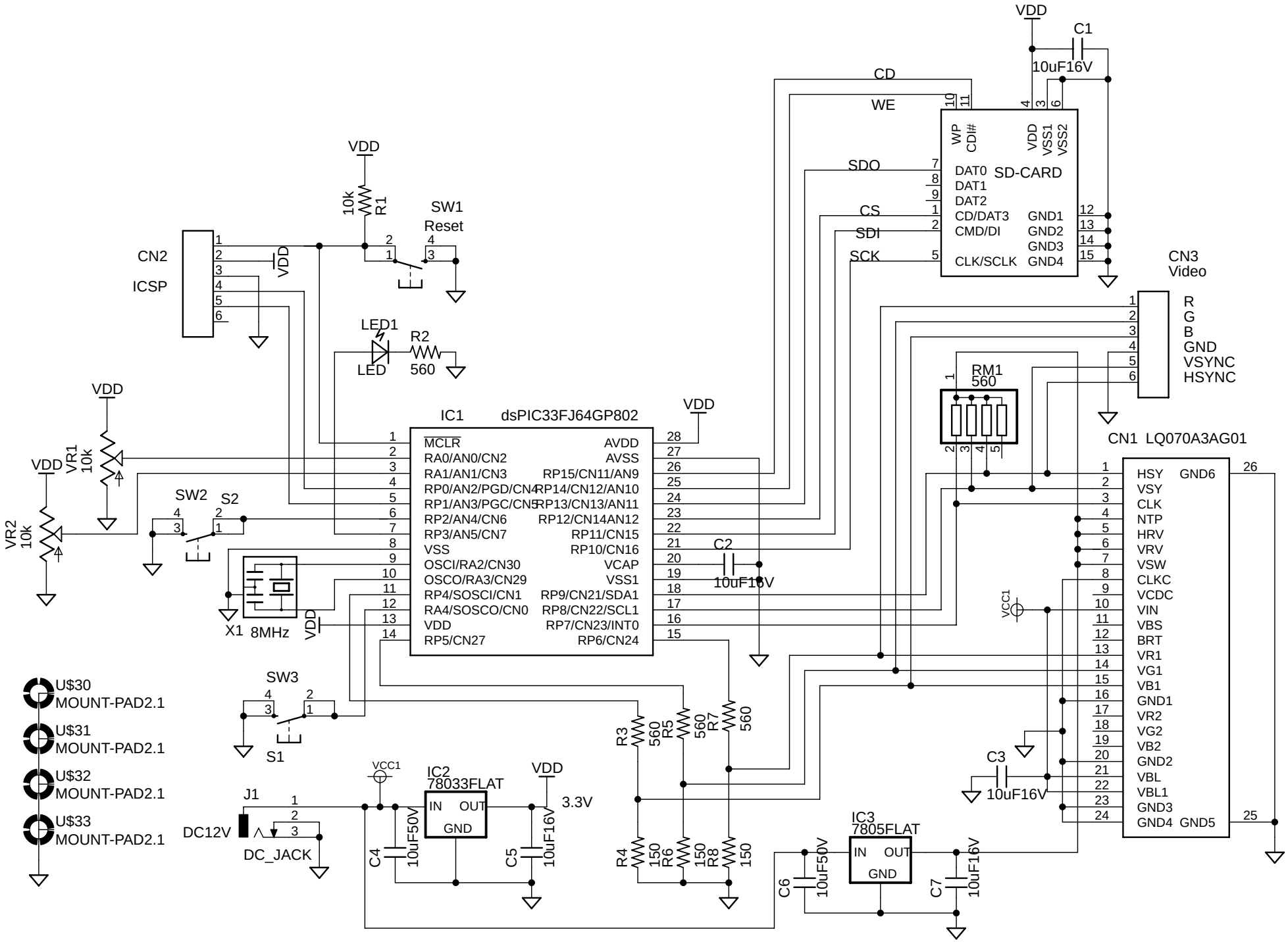

2010/03/29 18:47:49 f=1.20 D:\Eagle\Myproject\LCDBook\NTSC2\NTSC2.sch (Sheet: 1/1)