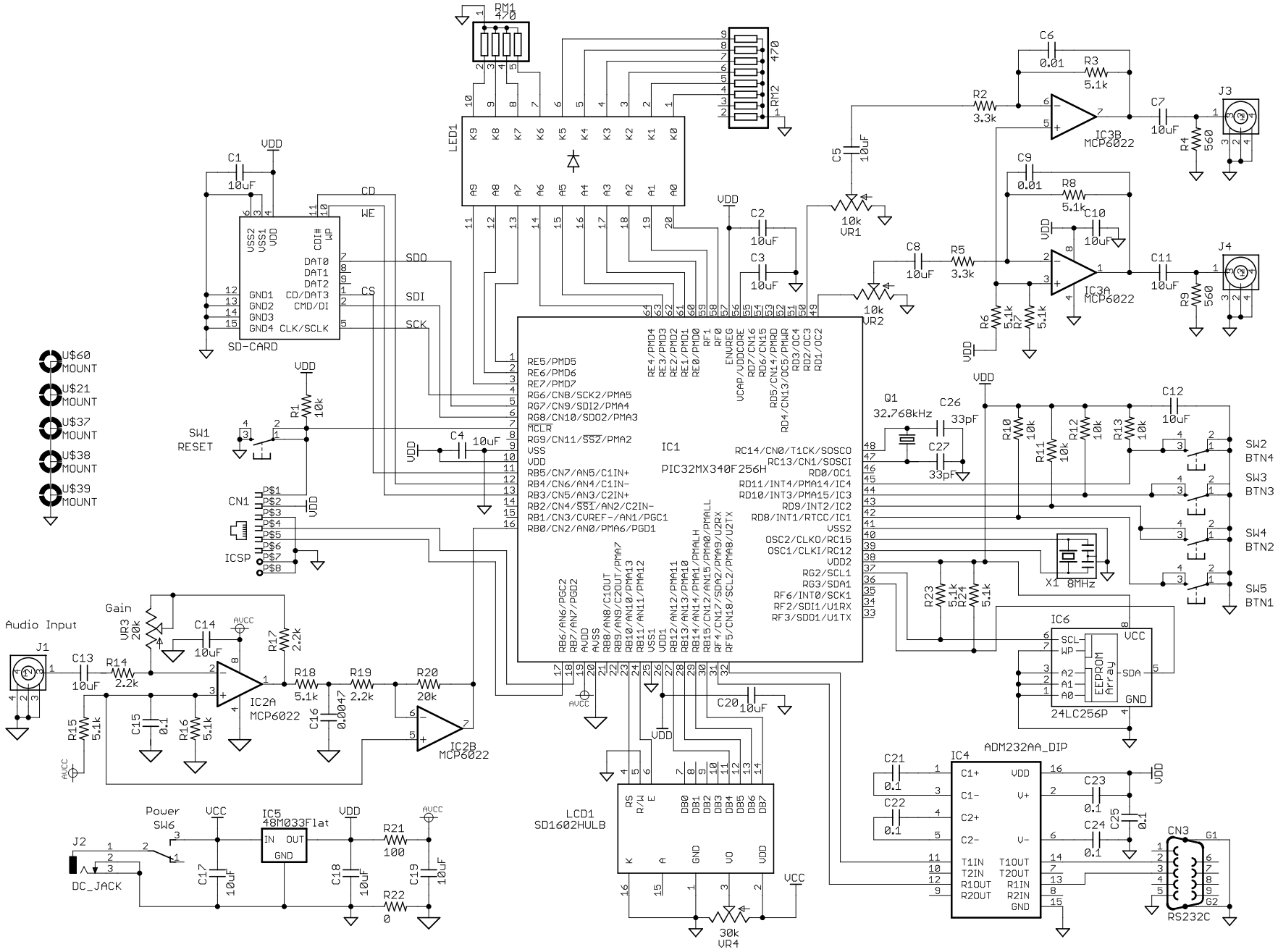

2009/06/13 16:25:51 f=0.80 D:\EAGLE\Myproject\PIC32MX\UIO1\UIO1.sch (Sheet: 1/1)