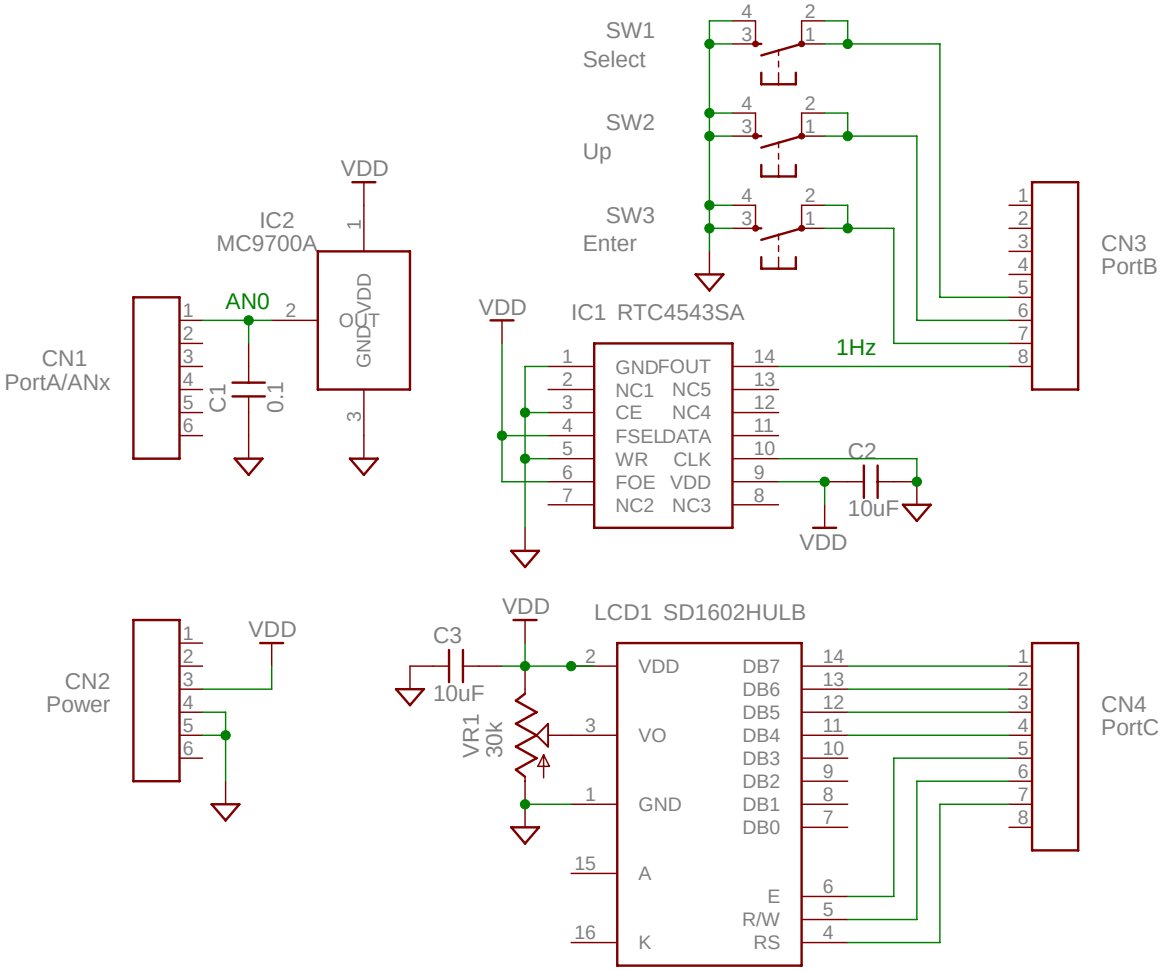

2011/05/13 11:34:52 f=1.20 D:\Eagle\Myproject\MyComBook\LCD_RTC\LCD_RTC.sch (Sheet: 1/1)